top management desk

TECHNICAL FILE

Aqua

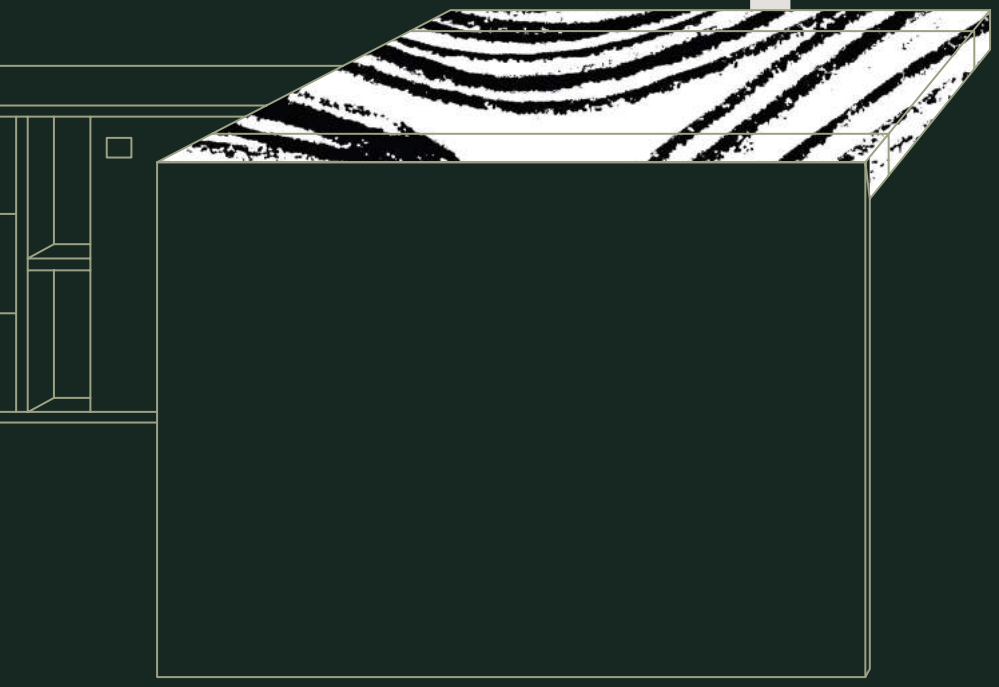

BOS
BARCELONA
SINCE 1964

Materials, Finishes & Quality

- Table top core is MDF Mediland quality LP classified as Class E1 according to European norm EN 622-1:2003 and density between 600-620KGS/m3 which is maxium in furniture appliance.
- To achieve the piano lacquer finish a thick layer of lacquer is applied which afterwards goes through a 10 days manual polishing process with wool.
- All pieces come with three layers of polish with **sanding by hand** between each layer to achieve an optimal smooth adherance and durability.
- The wooden parts are all **polished** with lacquers of polyurethane with high content of solids to build a greater hardness without losing the sensation of the wooden touch.
- The decorating elements are made by **laser cut stainless steel** finished by hand.
- The structures are made of steel given an **exclusive treatment** which consist of niquel bath, lacquered snd polished by hand.
- All tables are f**inished by hand,** pre-assembled in the factory, numbered one by one to guarantee a perfect assembly for the final client.
- **Unique packaging** in reticulated polyethylene foam, triple layer of laminate polyethylene with hermetic bubbles 5x5 and density of 5400 bubbles/m2, corner protectors of high density reticulated polyethylene foam and cardboard box made to fit.

UKAS MANAGEMENT SYSTEMS

UNE-EN ISO 9001:2015

UNE-EN ISO 14001:2015

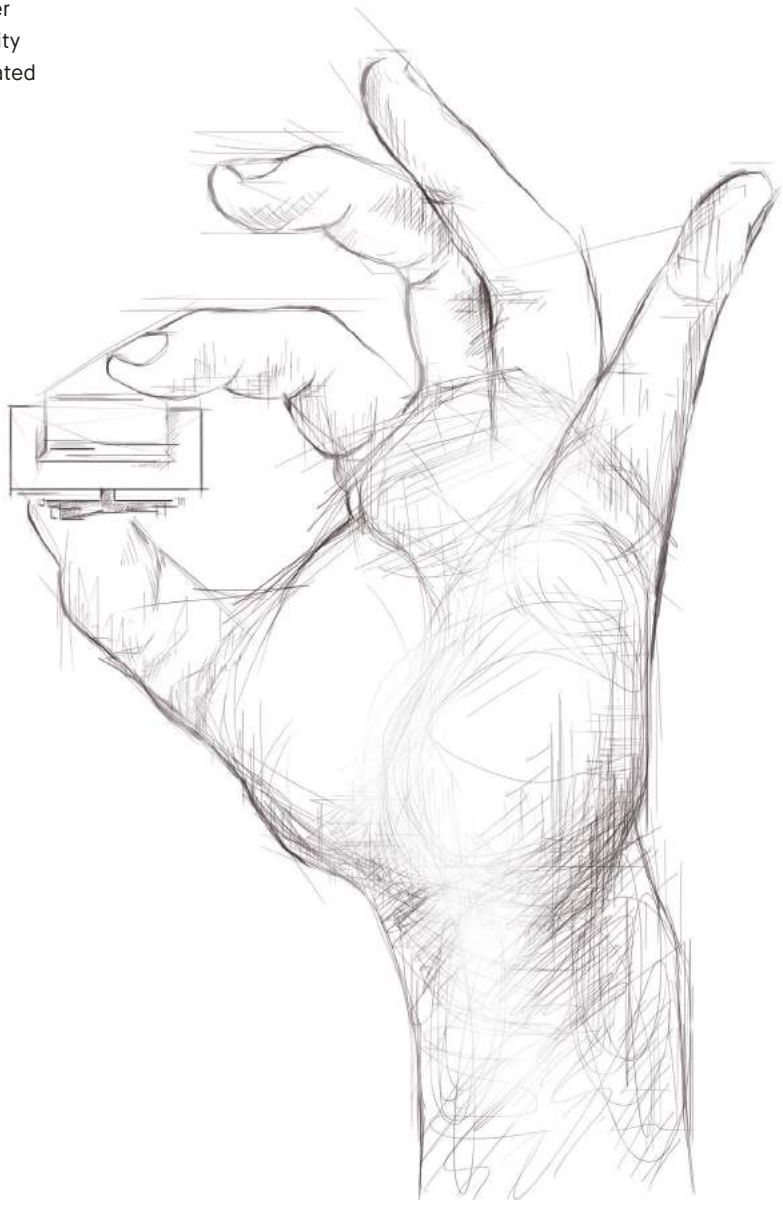

AQUA
TECHNICAL PRESENTATION

Presidential desk

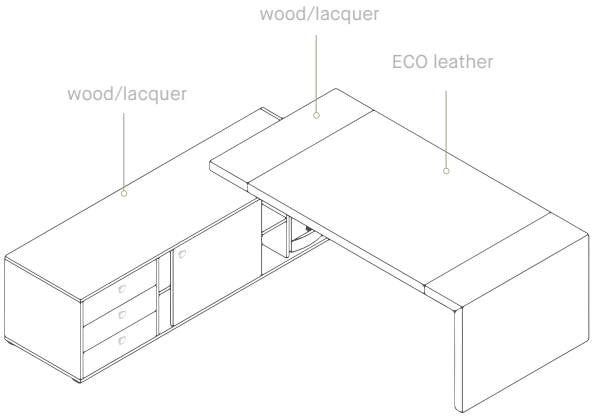

- Desk with MDF top of 60 mm / 2.4¨ in natural wood veneer or piano lacquer finish (white/black). The piano lacquer finish **can be customized as a special request.**
- The top is available with **optional central leather inlay** in different colors
- The desk is available as free standing or **supported on a left/right side return** with full storage. The side return comes with 3 drawers with soft closing mechanism and locking mechanism, cabinet with sliding door and CPU space.
- Desk is available with an optional long modesty panel and it is fitted with **round cable access point** in side return and can optionally be fitted with cable box (2xpower and 2xRJ45)
- The desks come with **levelers for floor adjustment**
- The desk has the **option of a long modesty panel** in wood veneer or piano lacquer finish. The modesty panel integrates nicely in the design of the desk and covers exact height of side return unit and leaves a small open space of air on the other side.

Dimensions

Office tables

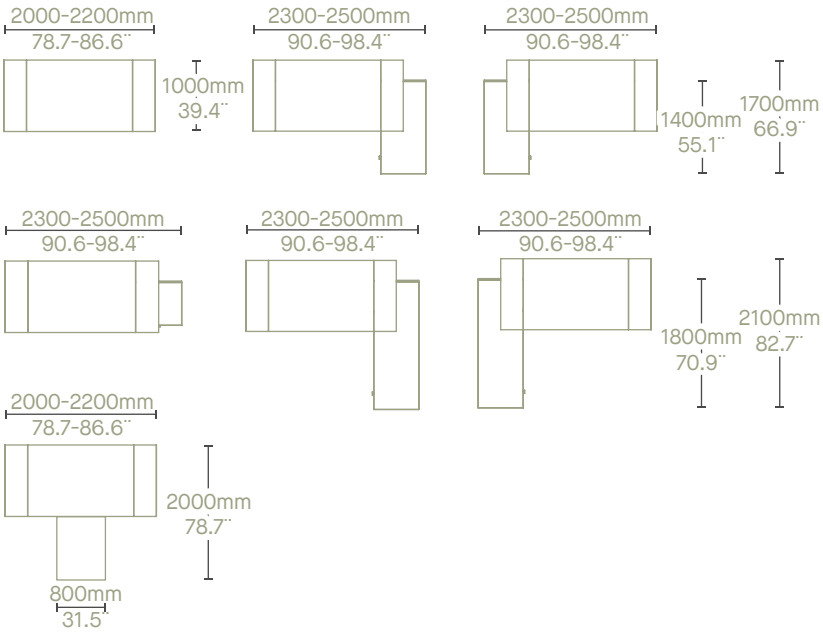

Mobile pedestals & Side credenzas

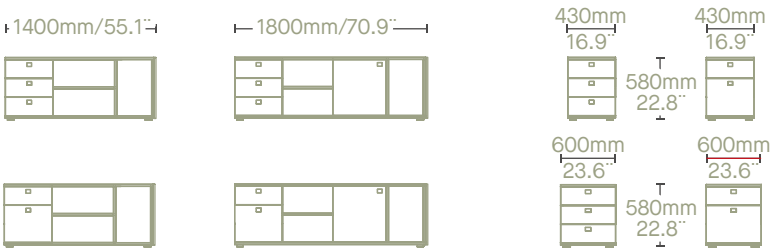

Table top

Thickness

Shape

Finishes

Wood
Lacquer
ECO leather

Structure

Shapes

Finishes

Wood
Lacquer

AQUA
TECHNICAL PRESENTATION

Conference tables

- Conference table **with MDF top of 60 mm / 2.4¨.**
- The conference tables with **optional cable management** through cable boxes and central wide leg with vertical wiring capability
- Conference table top with natural veneer or piano lacquer finish (white/ black). The piano lacquer finish **can be color customized as a special request.**
- The conference tables with **cable management** needs a double short modesty panel to centrally locate cable boxes (Flip / Flop type) with box of 3 positions (2 power + 2xRJ45) 6 positions (4xpower + 2xRJ45 + 1xUSB 1xHDMI) or custom configuration. Cable management can be inside the pannel leg. Optional vertical cable management via painted cable channel.

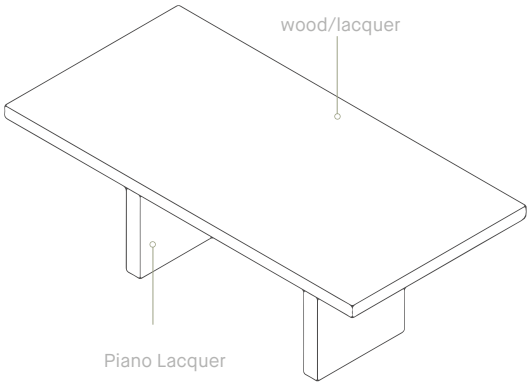

Dimensions

Meeting tables

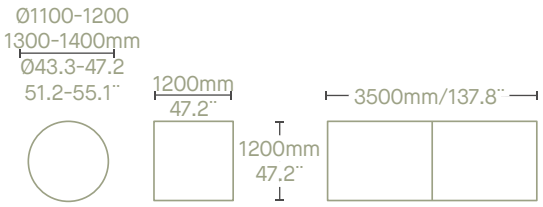

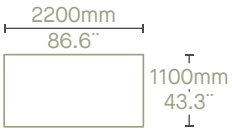

Table top

Thickness	Shape	Finishes
60mm 2.4¨		Wood Lacquer

Structure

Shapes	Finishes
60mm 2.4¨	Lacquer/wood
Ø600mm 23.6¨	Steel painted
700mm 27.6¨	Steel painted

AQUA
TECHNICAL PRESENTATION

PREMIUM COLLECTION

Credenzas & Bookcases

- Credenzas and bookcases from the **Premium collection** have tops, fronts, shelves, doors and sides in wood or piano lacquer.
- Transparent glass doors option with aluminium profile.
- Structure of base, inner panels and back, are in laminate white or black.
- Accessories can be added as lockery system, hangers and pull out filing drawers.

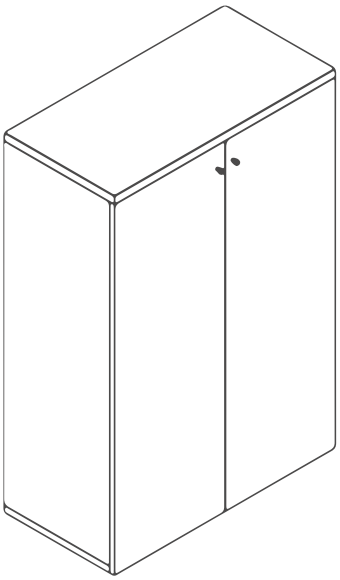

Dimensions

Credenzas & bookcases compositions

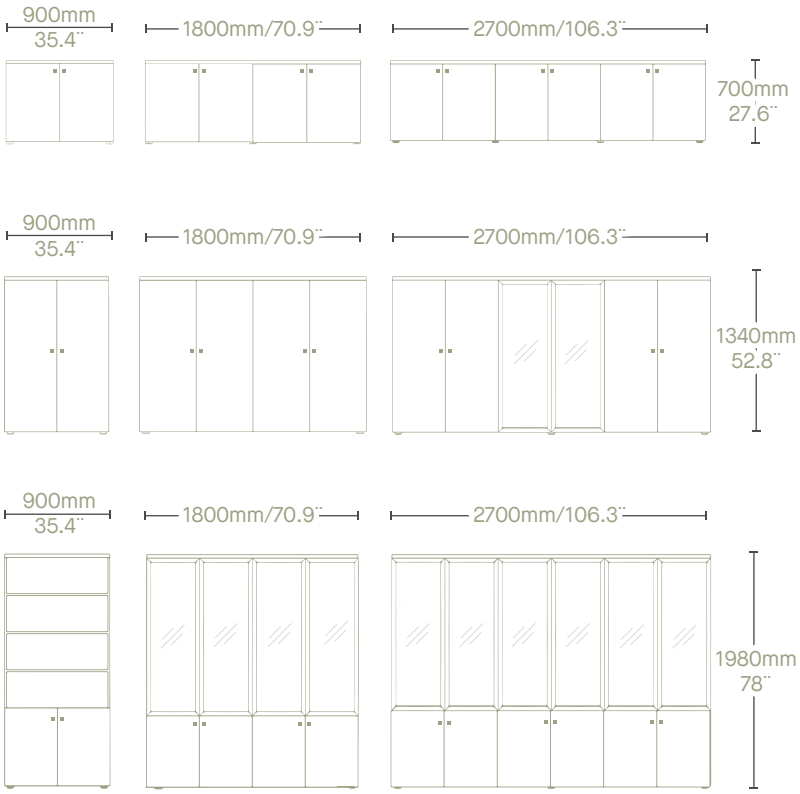

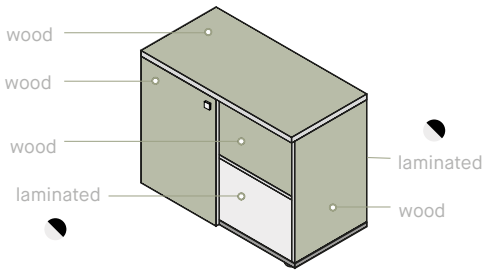

AQUA
TECHNICAL PRESENTATION

LUXURY COLLECTION

Credenzas & Bookcases

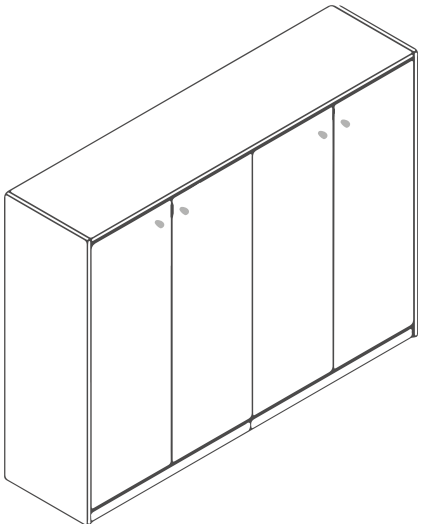

- Credenzas and bookcases from the **luxury collection** which are made with modules of 450 mm/17.7¨ or 900 mm/35.4¨ width, in black / white shiny lacquer with wooden or piano lacquered shelves or doors. To finish the composition you need to finish with top and side panels.
- Modules are either open or closed with **wooden/piano lacquered doors or transparent glass doors** with aluminium profile.
- There is a specific module which is prepared for incorporation of refrigerator to make a bar module.
- Credenzas offer the possibility of a module with 4 drawers.

Dimensions

Credenzas & bookcases compositions

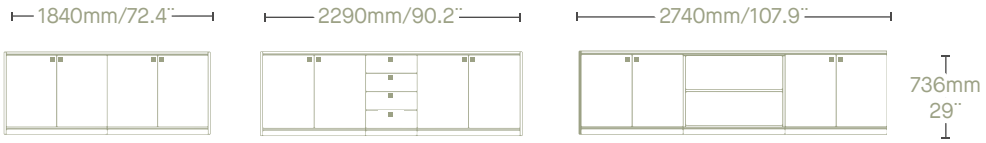

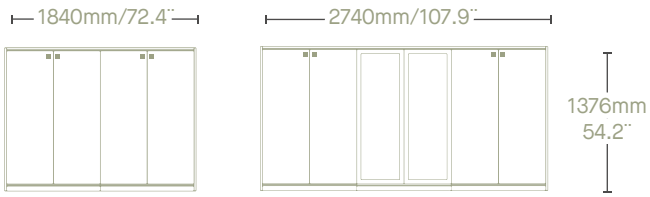

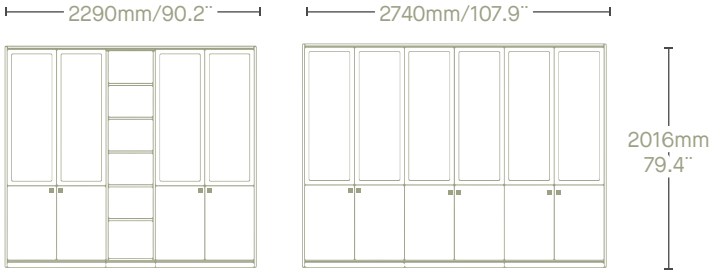

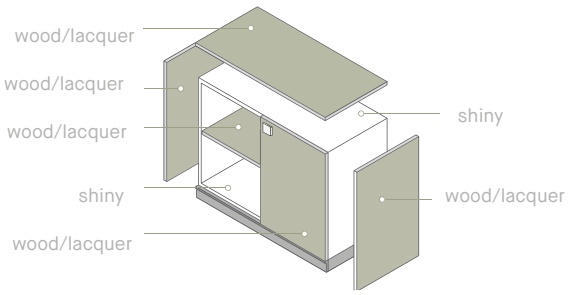

AQUA
TECHNICAL PRESENTATION

Occasional tables

- Matching coffee tables with **MDF top of 60 mm / 2.4¨** in natural leather and legs of 60mm in piano lacquer or wood.

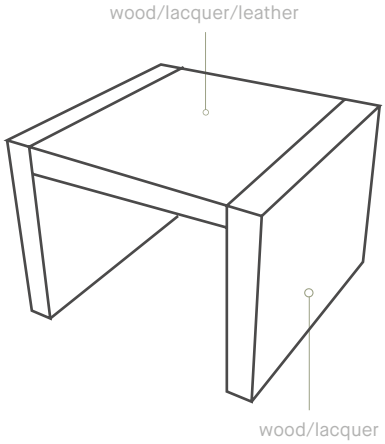

Dimensions

Meeting tables

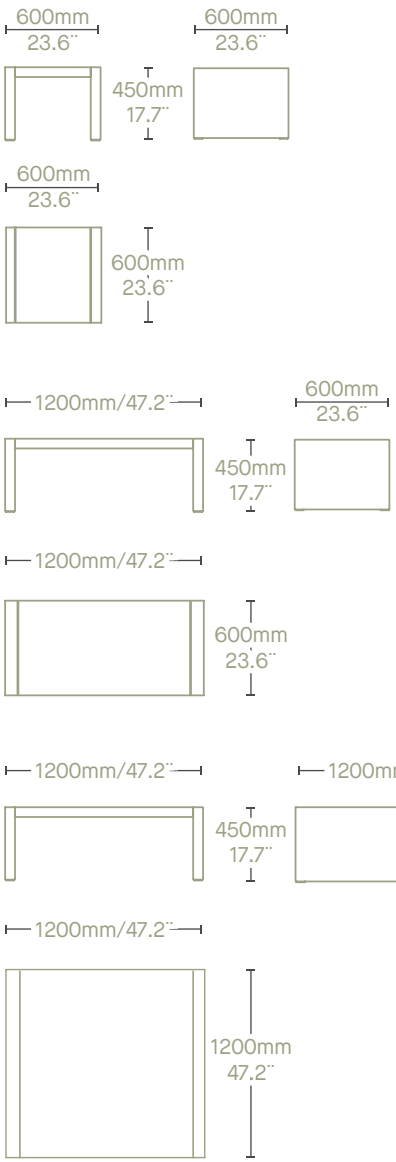

Table top

Thickness

Shape

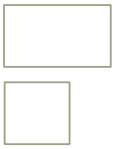

Finishes

Wood
Lacquer
Leather

Structure

Finishes

Wood or lacquer

CABLE MANAGEMENT

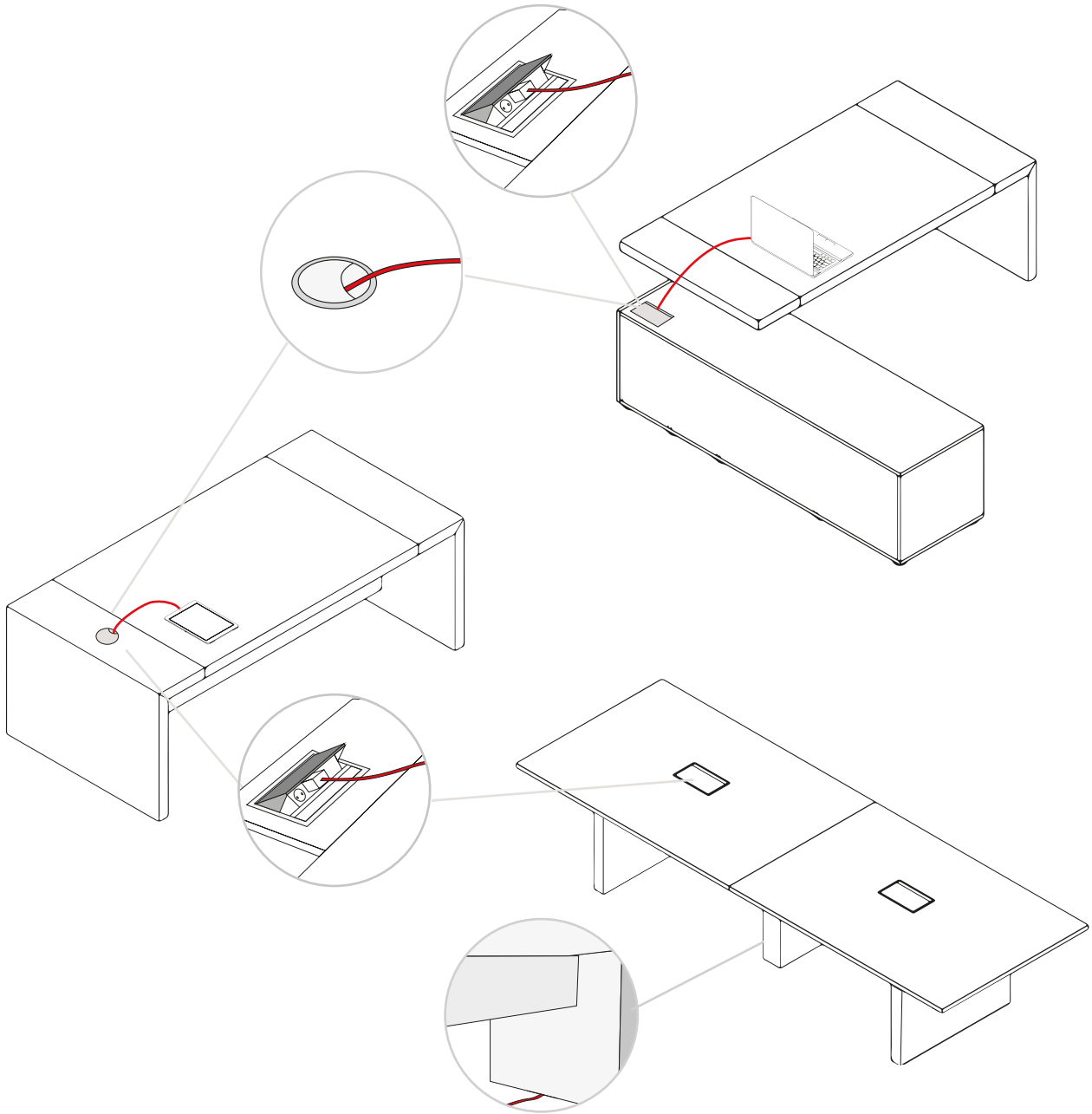

Powerstrip options - Power strip three positions

Schuko

UK socket

US socket

Euroamericana

Charger USB

USB A

USB B

USB C

RJ45 cat6

HDMI

VGA with jack

DVI

XR L 3 pins

RCA

FINISHES

Natural wood veneers

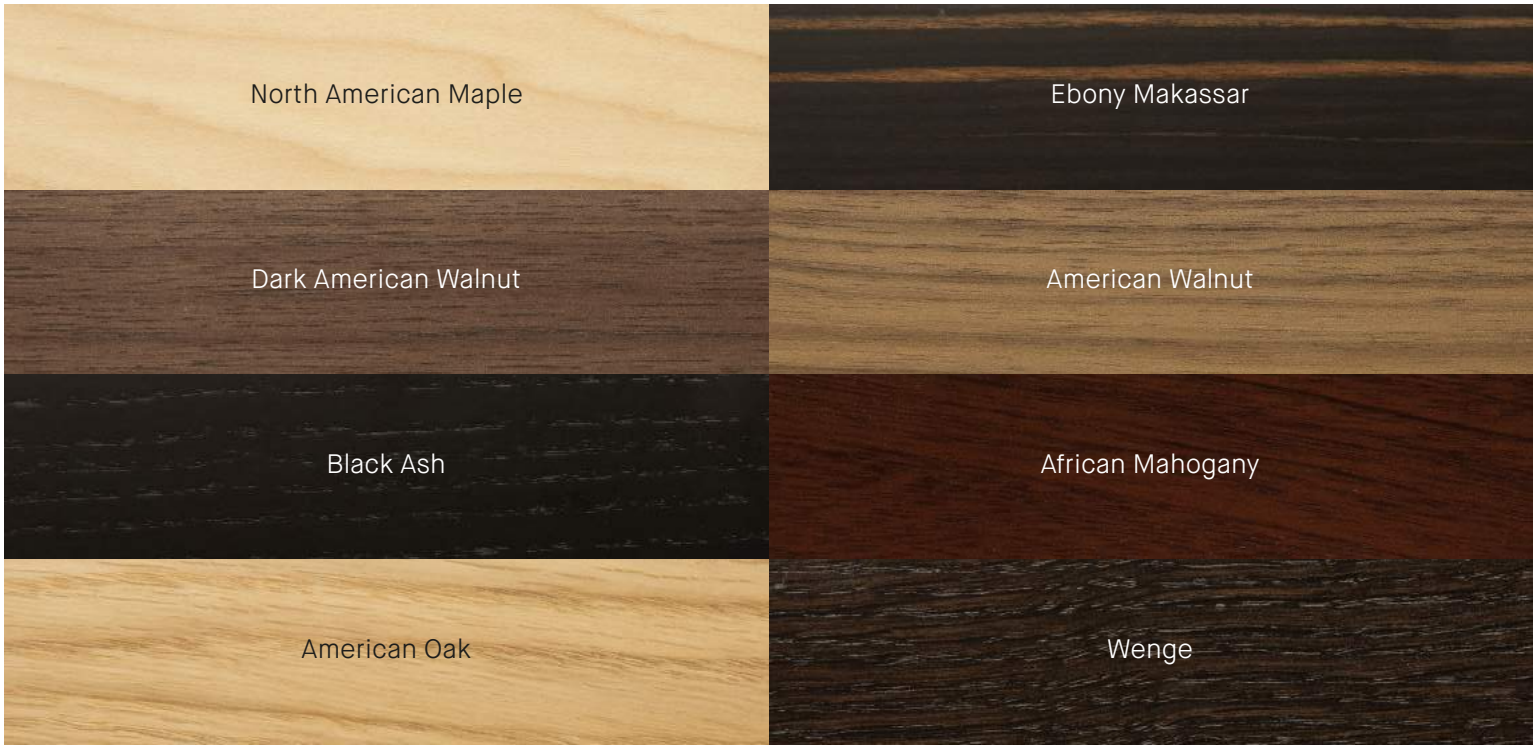

Lacquer finishes

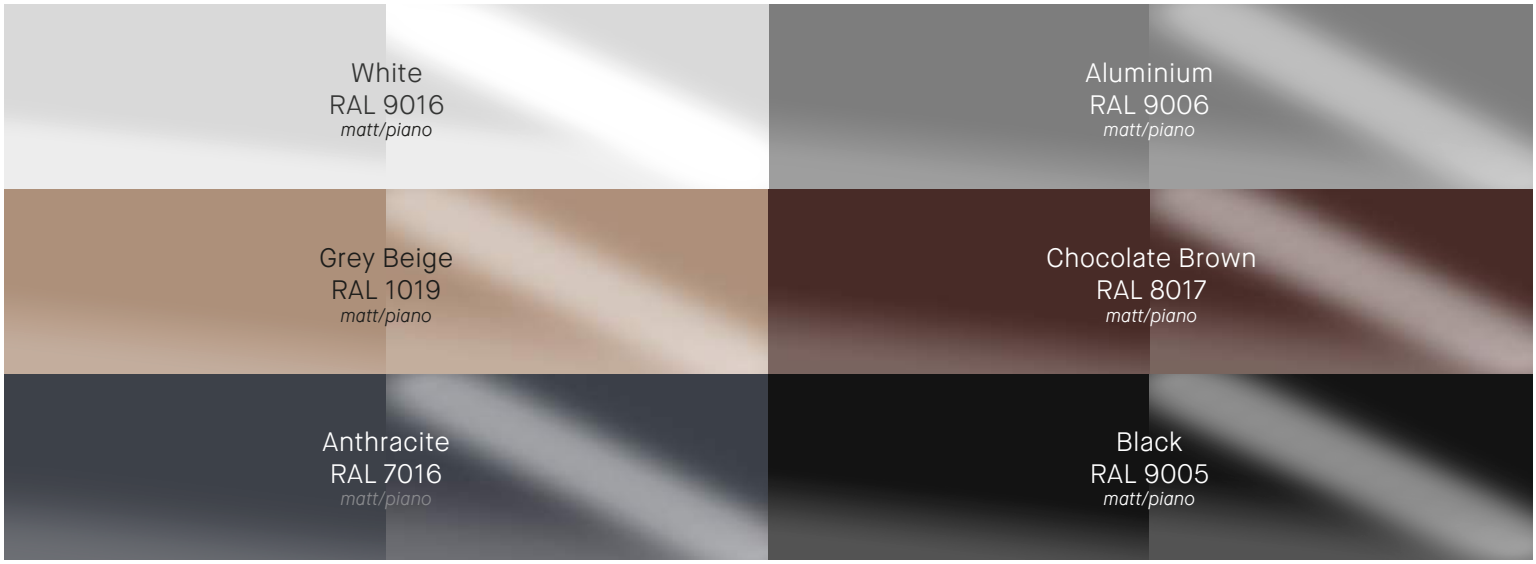

Natural Leather - serie 100 - *Category Leather*

179	136	126
131	142	117
113	127	121
197	125	103

Eco Leather - Valencia - *Category **FAB1***

8032	1048	1049
1001	0002	9001
4001	1050	0035
2020	6019	0033
6012	2075	2062
5001	5069	0020
3001	3069	3067
4040	4002	4045
4043	4041	4003
		9035

BOS
BARCELONA
SINCE 1964

Diagonal 456
08006 Barcelona (Spain)

T +34 932 370 942
info@bos1964.com

bosbarcelona.com

Instagram
@bosbarcelona

Facebook
/bos1964

Linkedin
Bos Barcelona

Pinterest
/bos1964

Youtube
BOS Barcelona